| REVISIONS | | | | |
|---|---|---|---|---|
| ZONE | REV | DESCRIPTION | DATE | APPROVED |

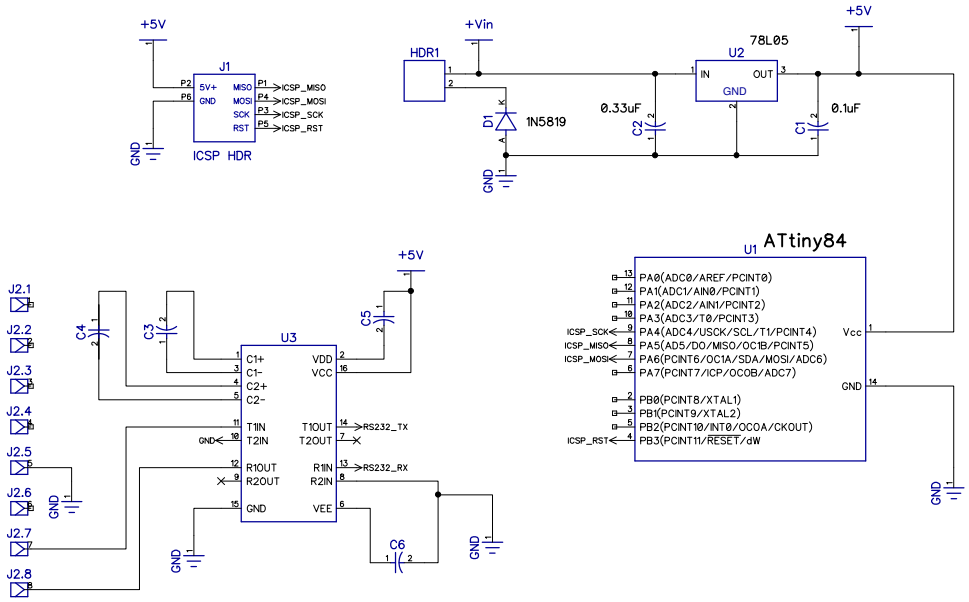


| | | | | |
|---|---|---|---|---|
| | SIZE | FSCM NO. | DWG NO. | REV |
| | SCALE | | Sheet 1 | |